info@novabath.ca | 1-833-878-NOVA (6682) | www.novabath.ca

Vessel

Slide 40

Dimensions
15-3/4" L x 15-3/4" W x 5-1/2" H (400mm L x 400mm W x 140mm H)

Category
Countertop washbasin

Material
VetroFreddo®

Overflow
No

Weight
± 2.9 Kg

Colour	Colour	Colour	Colour
Matt White	Matt Black	Old Brass	Old Dark Inox
Code	**Code**	**Code**	**Code**
SLIDE40PO01	SLIDE40PO30	SLIDE40OB	SLIDE40DXO

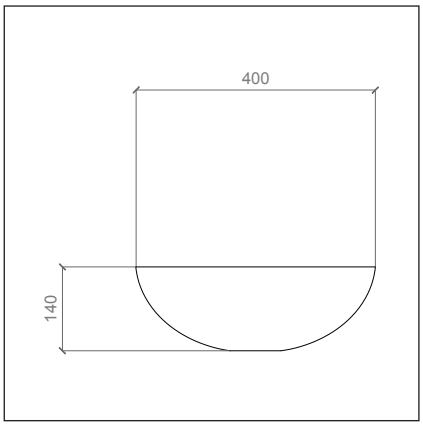

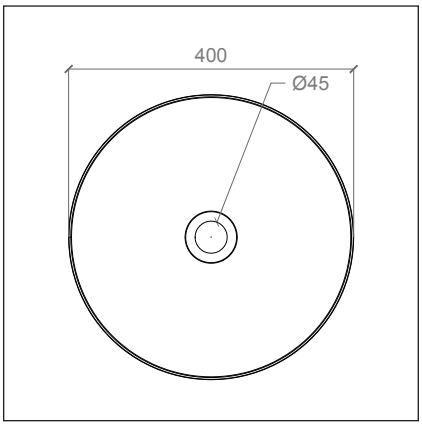

Technical amendments & tolerances are subject to change.