info@novabath.ca | 1-833-878-NOVA (6682) | www.novabath.ca

Vanity

Idra

Dimensions

56-3/4" L x 19-5/8" W x 16-1/2" H (144cm L x 50cm W x 42cm H)

Base

Noce #55814

Top

Matt White #50265

** 2 Single Hole Faucet*

Feet

Noce #40447

** Sold As A Pair*

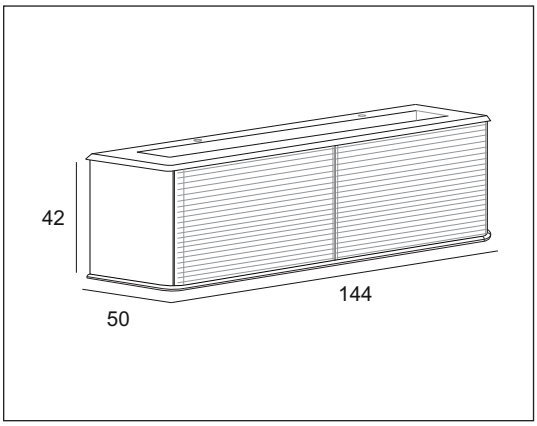

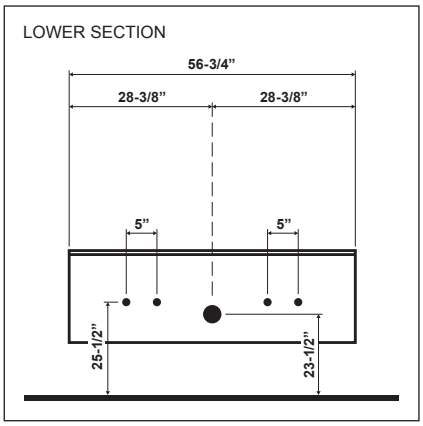

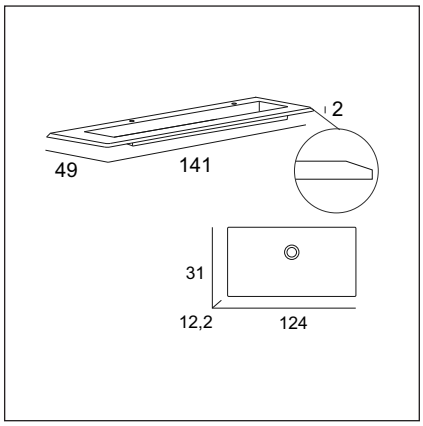

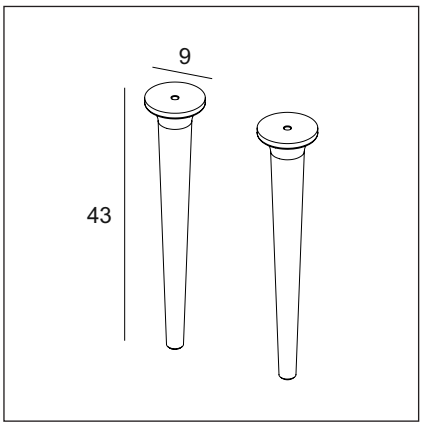

Technical amendments & tolerances are subject to change.