Mirrors

Dimensions
35-3/8" x 35-3/8" (90cm x 90cm)
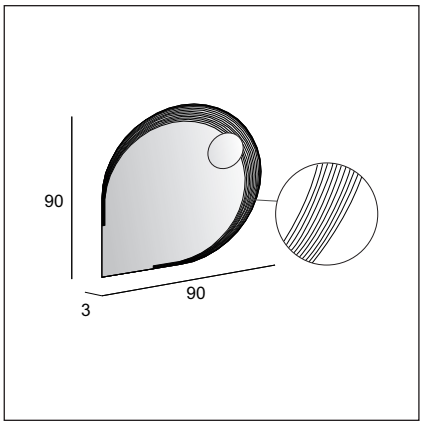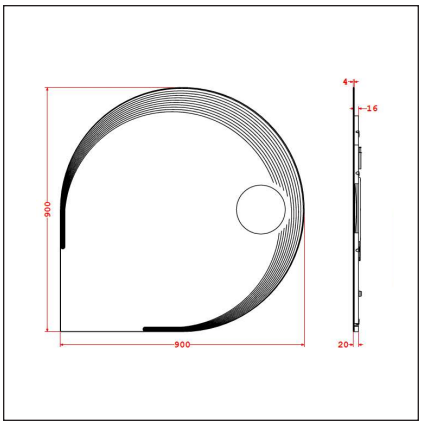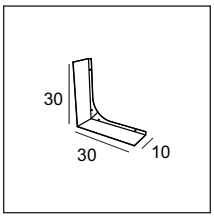
Code 46023 (45012) + 45013 (Shelf)