Mirrors

Dimensions
23-5/8" x 35-3/8" (60cm x 90cm)

Code 46009 (45028)

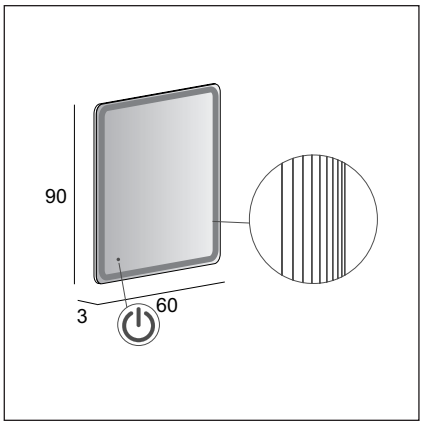

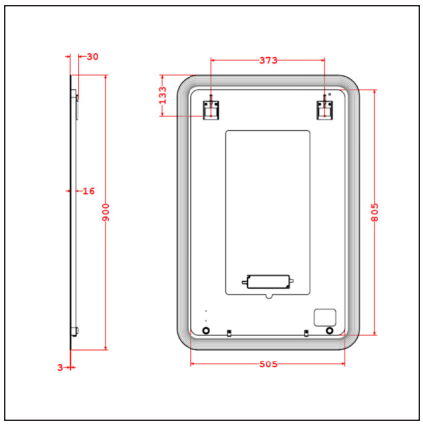

Dimensions
28-1/8" x 35-3/8" (74cm x 90cm)
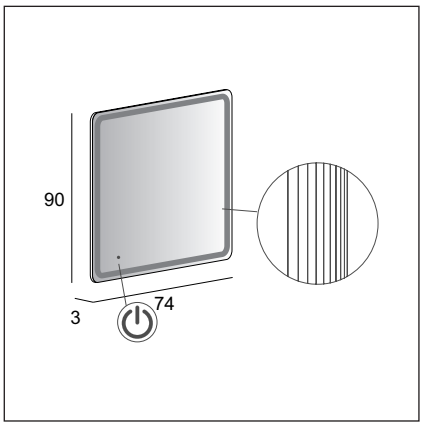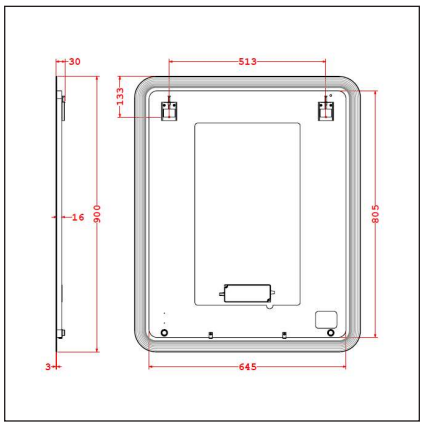
Code 46010 (44998)