Mirrors

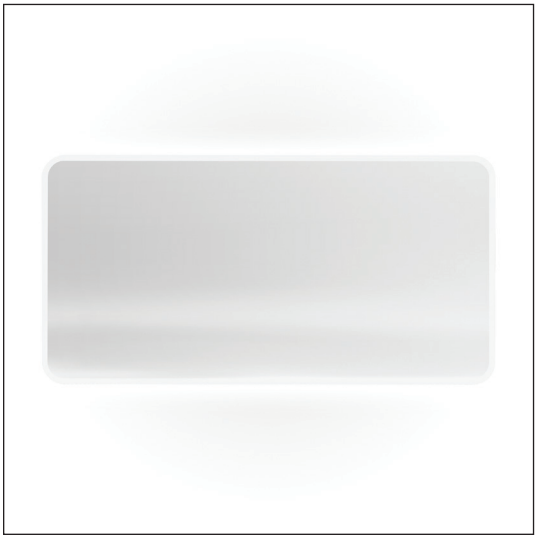

Dimensions
55-1/2" x 27-5/8" (141cm x 70cm)
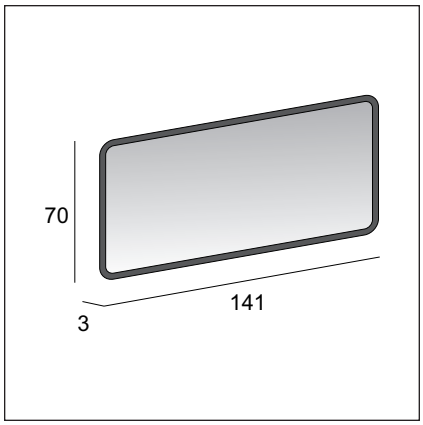
Code
46016 (44994)