info@novabath.ca | 1-833-878-NOVA (6682) | www.novabath.ca

Vanity

Olimpia

Dimensions

27-1/8" L x 20-1/2" W x 21-5/8" H (69cm L x 52cm W x 55cm H)

Base		**Top**	
Matt Black	#55661	Extra Light White	#82410
Tobacco Oak	#55657	Matt Black	#82427

** Single Hole Faucet*

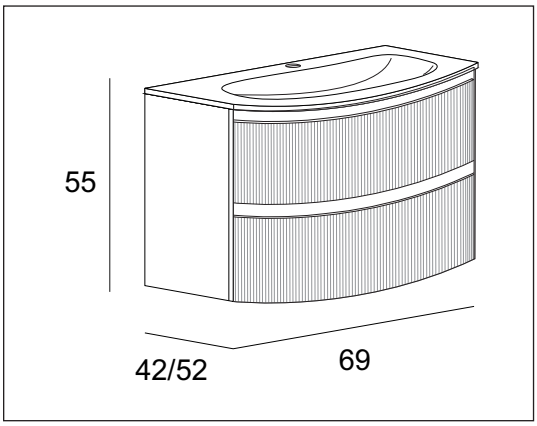

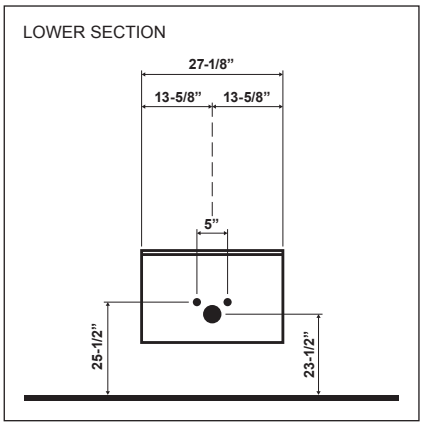

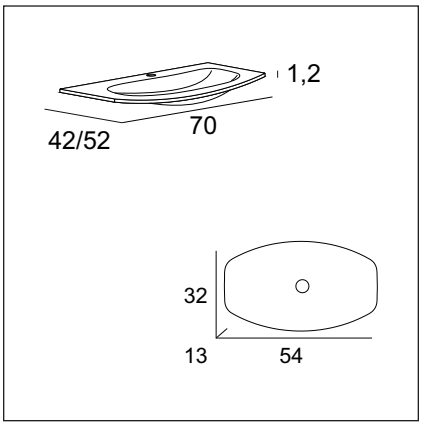

Technical amendments & tolerances are subject to change.