info@novabath.ca | 1-833-878-NOVA (6682) | www.novabath.ca

Vanity

Vague

Dimensions

27-1/8" L x 20-1/2" W x 21-5/8" H (69cm L x 52cm W x 55cm H)

Base		**Top**	
Antracite	#44221	Extra Light White	#82410
White	#44220	Matt Black	#82427
Bleached Oak	#54847		
Tobacco Oak	#54834		

** Single Hole Faucet*

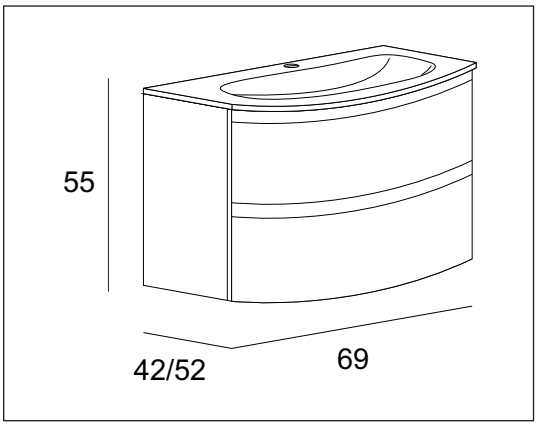

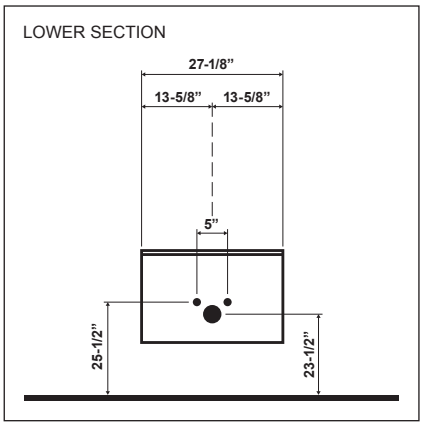

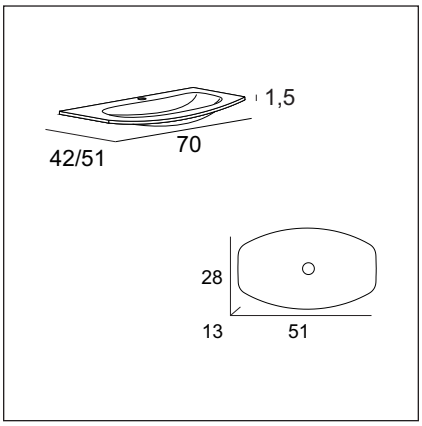

Technical amendments & tolerances are subject to change.